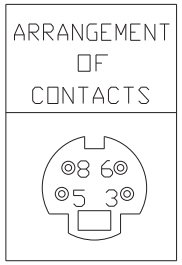

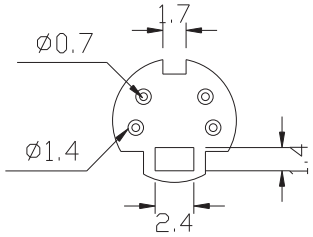

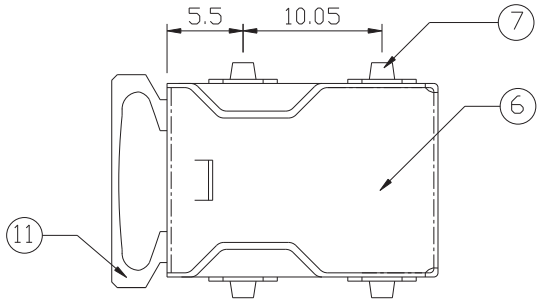

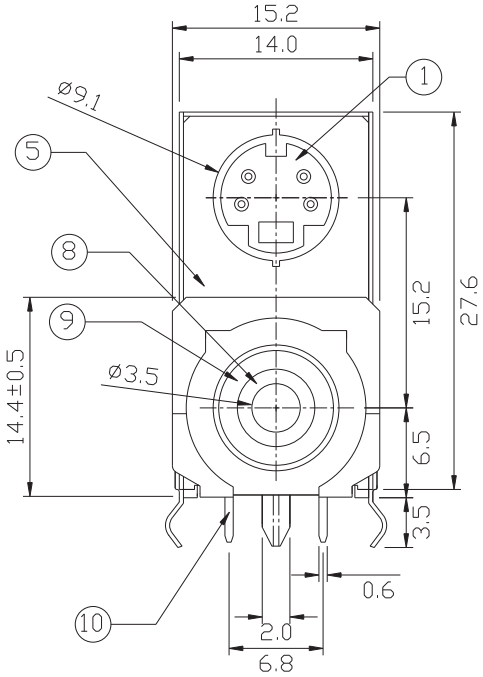

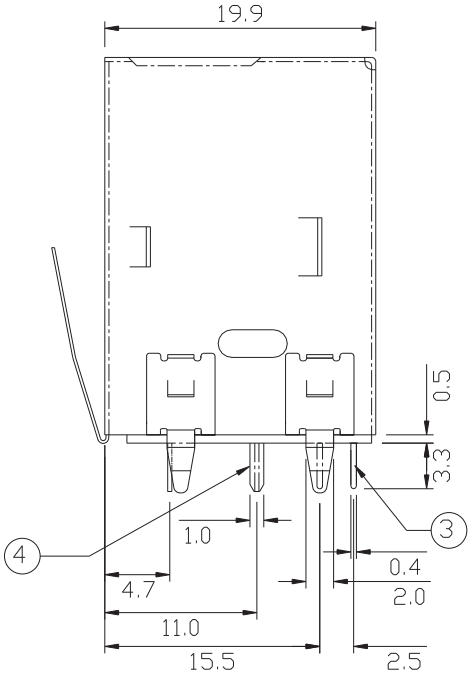

ORDER INFORMATION:

HDR2- 04 - S - B P - D
a b c d e

a. Pos NO:
04
b.Shell option:
S: FULLY SHIELDED & SPRING WITH KINK
c. Housing color:
B:Black
d. Insulator material:
P:PBT
e. Pack selection:
D:Disk Pack

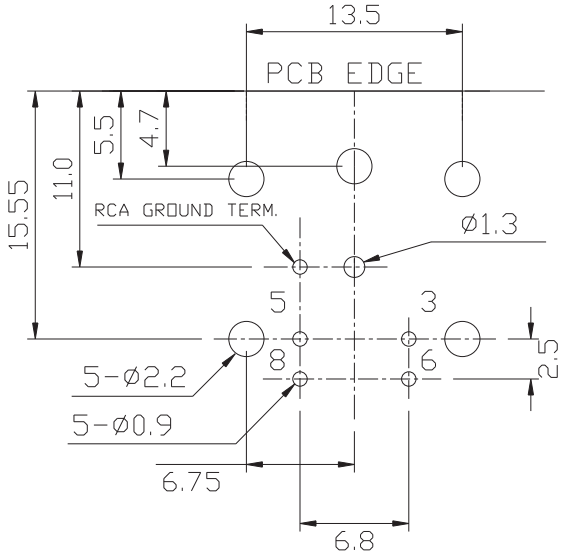

PCB LAYOUT
(BOTTOM VIEW)

NO.	NAME	MATERIAL	FINISH	Q'TY	REMARK
1	HOUSING	PBT G.F.	BLACK	1	
2	BOTTOM COVER	PBT G.F.	BLACK	1	
3	MINI DIN TERM.	PHOS. BRONZE	TIN/GOLD PLATED	4	Gold:1~3u"; NI:40~60u" ; TIN:120u" (100% pure Tin of lead free plating)
4	RCA TERM.	BRASS T=0.4	TIN PLATED	1	TIN:120~200u"
5	FRONT SHIELD	BRASS T=0.3	NICKEL PLATED	1	NI:80~120u"
6	BACK SHIELD	BRASS T=0.3	NICKEL PLATED	1	NI:80~120u"
7	TAB	BRASS T=0.3	TIN PLATED	4	TIN:120~200u"
8	INSERT RING	PBT G.F.	YELLOW	1	
9	RCA BARREL	BRASS	NICKEL PLATED	1	NI:80~120u"
10	RCA GROUND TERM.	BRASS T=0.3	TIN PLATED	1	TIN:120~200u"
11	GROUND SHIELD	STAINLESS	0.2 THK	1	

GENAL TOLERANCE ± 0.30	DATE H. D. LI	PART NO HDR2-04-S-BP-D
	DESIGN H. D. LI	TITLE MINI DIN & RCA JACK WITH KINK TYPE
	CHECKED Y. M. LU	宏揚精密有限公司 HOJAR PRECISION CO., LTD.
UNIT :mm	APPROVED J. F. KANG	