ORDER INFORMATION:

DHMINID066 - $\frac{08}{a}$ V - $\frac{B}{b}\frac{P}{c}$ - $\frac{D}{d}$

a. Position:
   08
b. Color selection:
   B:Black
c. Insulator material:
   P:PBT
d. Pack selection:
   D:Disk Pack

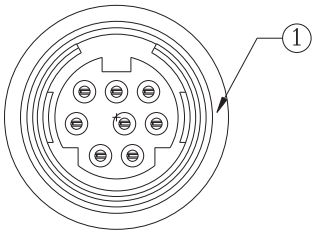

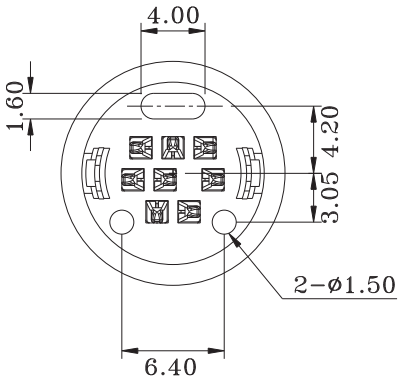

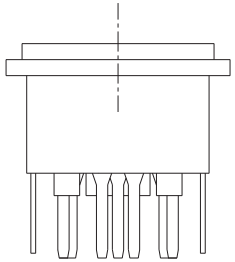

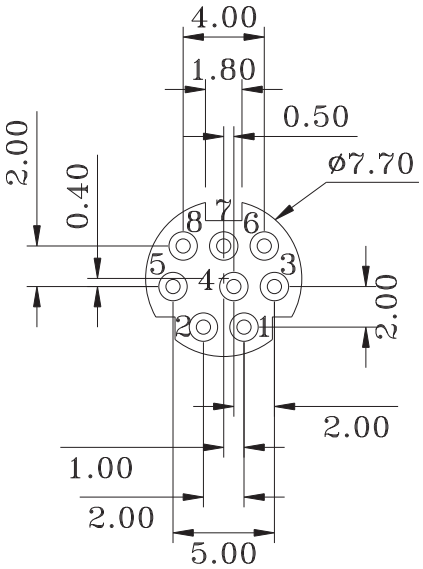

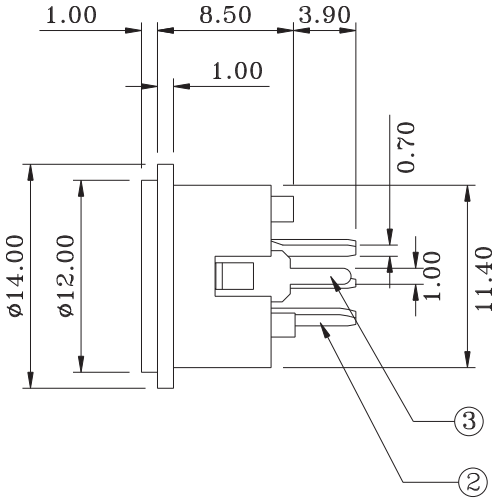

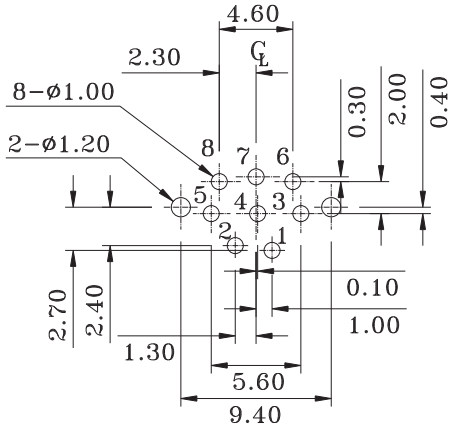

COMPONENT SIDE
(PCB LAYOUT)

NO.	NAME	MATERIAL	FINISH	Q'TY	REMARK
1	HOUSING	P.B.T.	BLACK	1	
2	CONTACT TERM.	PHOS. BRONZE T:0.2	SILVER PLATED	8	SILVER:20~30 μ"
3	GROUND TERM.	BRASS T:0.3	TIN PLATED	1	TIN:120~200 μ"

GENAL TOLERANCE ± 0.30	DATE H. D. LI	PART NO DHMINID066-08V-BP-D
	DESIGN H. D. LI	TITLE MINI DIN JACK 8P VERTICAL
	CHECKED Y. M. LU	
UNIT :mm	APPROVED J. F. KANG	宏揚精密有限公司 HOJAR PRECISION CO., LTD.