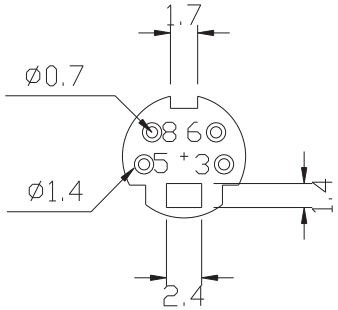

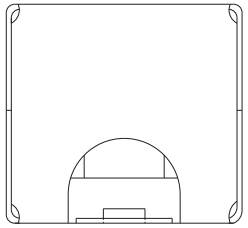

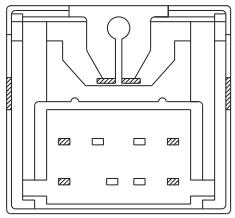

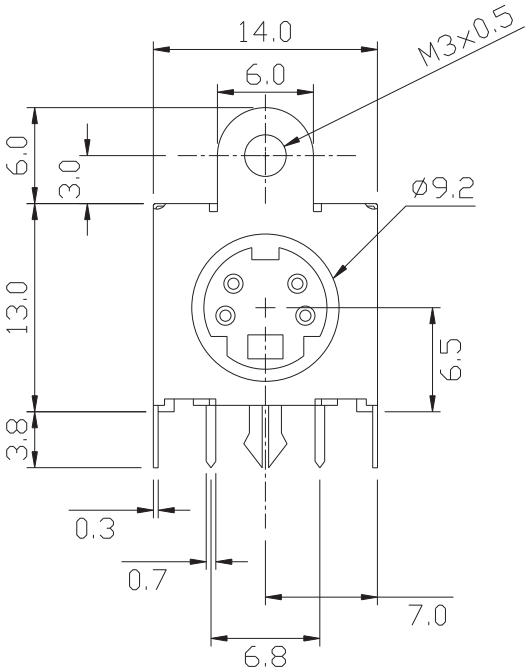

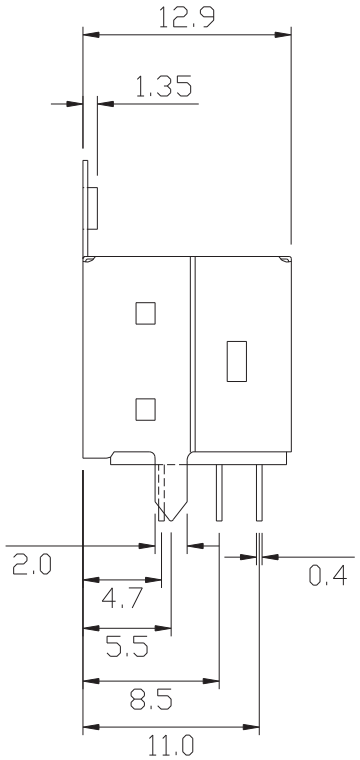

ORDER INFORMATION:

M D2 - 5 04S- B P - D
a b c d e

a. Shell option:
5:FULLY SHIELDED WITH STRAIGHT TABS
b. Position:
04
c. Color selection:
B:Black
d. Insulator material:
P:PBT
e. Pack selection:
D:Disk Pack

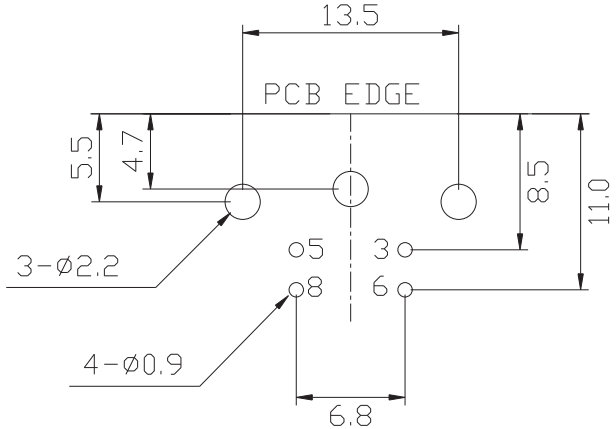

PCB LAYOUT
(BOTTOM VIEW)

NO.	NAME	MATERIAL	FINISH	Q'TY	REMARK
1	HOUSING	PBT G.F.	BLACK	1	
2	CONTACT	PHOS. BRONZE T:0.2	GOLD-TIN PLATED	4	Gold:1~3u"; NI:40~60u"; TIN:120u" (100% pure Tin of lead free plating)
3	SHIELD	BRASS T:0.3	TIN PLATED	1	TIN:120~200u"
4	BOTTOM COVER	PBT G.F.	BLACK	1	

GENAL TOLERANCE ± 0.30	DATE H. D. LI	PART NO MD2-504S-BP-D
	DESIGN H. D. LI	TITLE MINI DIN JACK 4P RIGHT ANGLE FULLY SHIELDED WITH LOCK TYPE
	CHECKED Y. M. LU	宏揚精密有限公司 HOJAR PRECISION CO., LTD.
UNIT :mm	APPROVED J. F. KANG	