ORDER INFORMATION:

SM D2 - 5 06 - A0 - B N - D
a b c d e f

a. Shell option:
5:FULLY SHIELDED WITH STRAIGHT TABS
b. Position:
6
c. Post selection:
0:without post
d. Color selection:
B:Black
e. Insulator material:
N:NYLON 9T
f. Pack selection:
D:Disk Pack

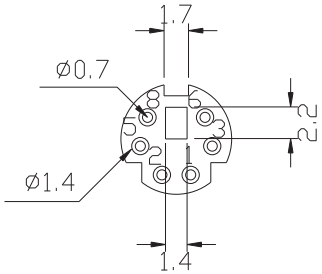

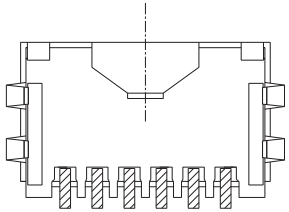

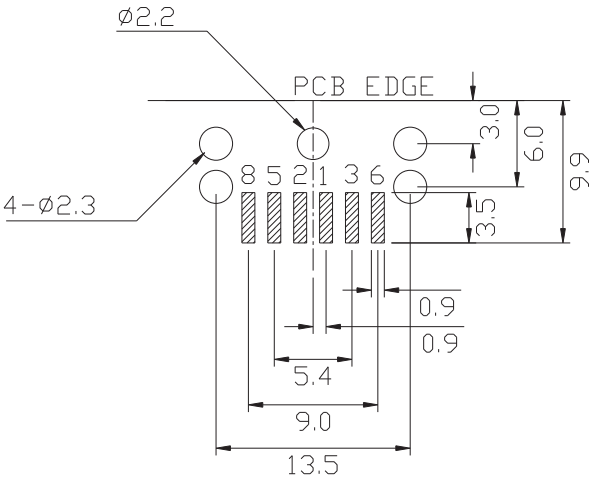

PCB LAYOUT
(BOTTOM VIEW)

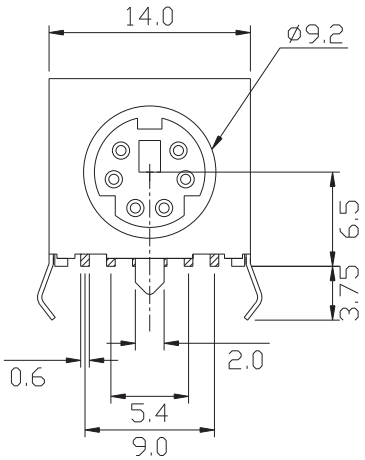

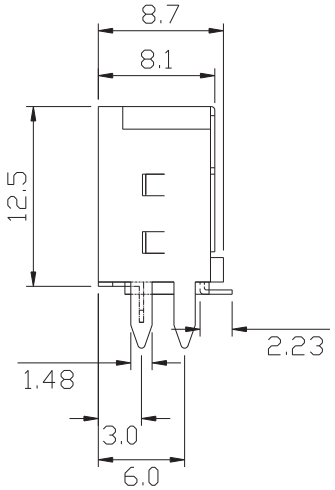

NO.	NAME	MATERIAL	FINISH	Q'TY
1	HOUSING	NYLON PA9T G.F.	BLACK	1
2	CONTACT	PHOS. BRONZE T:0.2	Gold:1~3u"; NI:40~60u"; TIN:120u" (100% pure Tin of lead free plating)	6
3	SHIELD	BRASS T:0.3	TIN PLATED ; TIN:120~200u"	1

GENAL TOLERANCE ± 0.30	DATE H. D. LI	PART NO SMD2-506-A0-BN-D
	DESIGN H. D. LI	TITLE MINI DIN JACK 6P SHORT BODY FLAT SMT TYPE
	CHECKED Y. M. LU	宏揚精密有限公司 HOJAR PRECISION CO., LTD.
UNIT :mm	APPROVED J. F. KANG	