ORDER INFORMATION:

SEAR12 - 063X - X - A/B/C - X
(a: 063X, b: X, c: A/B/C, d: X)

a. SCHEMATIC:
A~D
b. Post selection:
1: with post
c. Length/Width/Height:
A/B/C (A=11.0,B=6.0,C=3.2) (standard)
d. Pack selection:
R:Reel Pack

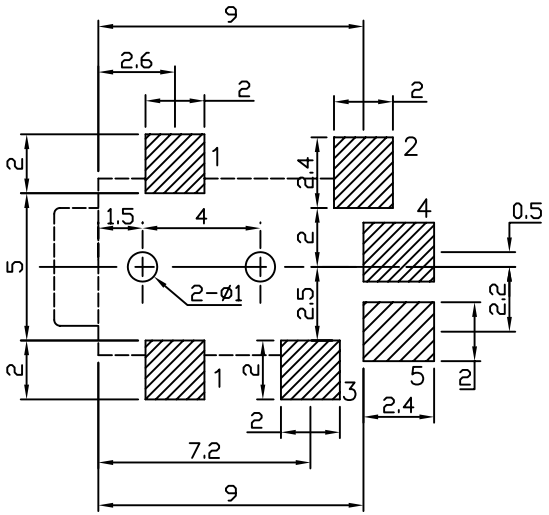

T:1.6 Dimensions of PC board holes
Tolerance : ±0.1(Printed-top view)

SCHEMATIC			
SEAR12-063A	SEAR12-063B	SEAR12-063C	SEAR12-063D
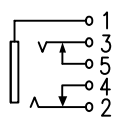	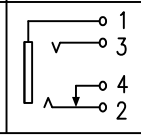	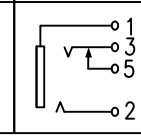	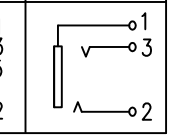

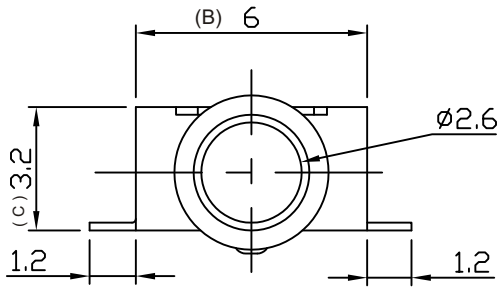

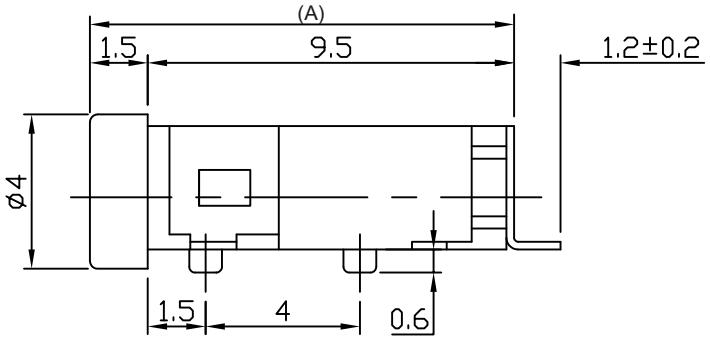

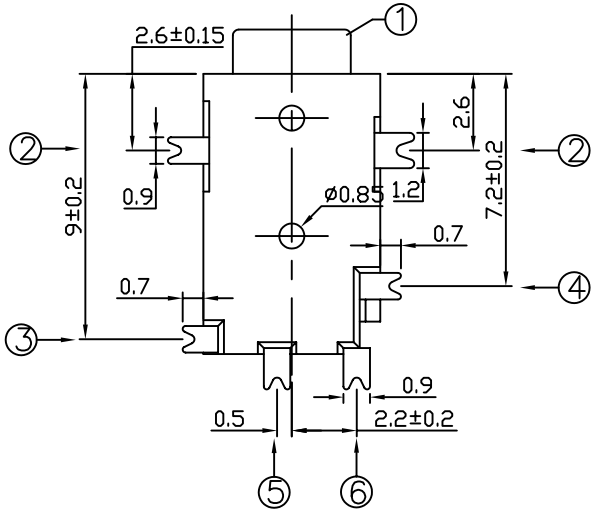

LTR	PART NAME	QTY	MATERIAL	REMARK
6	CONTACT FOOT	1	PHOSPHOR BRONZE	MB:Cu Ag(Au) PLATED
5	CONTACT FOOT	1	PHOSPHOR BRONZE	MB:Cu Ag(Au) PLATED
4	SPRING PIECE	1	ALDARY	MB:Cu Ag(Au) PLATED
3	SPRING PIECE	1	ALDARY	MB:Cu Ag(Au) PLATED
2	CONTACT FOOT	1	ALDARY	MB:Cu Ag(Au) PLATED
1	HOUSING	1	PA9T	

GENAL TOLERANCE ± 0.2	DRAW M. C. WANG	PART NO SEAR12-063X-X-A/B/C-X
	DESIGN H. D. LI	TITLE 2.5MM MINIATURE JACK (SMT)
	CHECKED Y. M. LU	宏揚精密有限公司 HOJAR PRECISION CO., LTD.
UNIT :mm	APPROVED J. F. KANG	